pinion P1.18

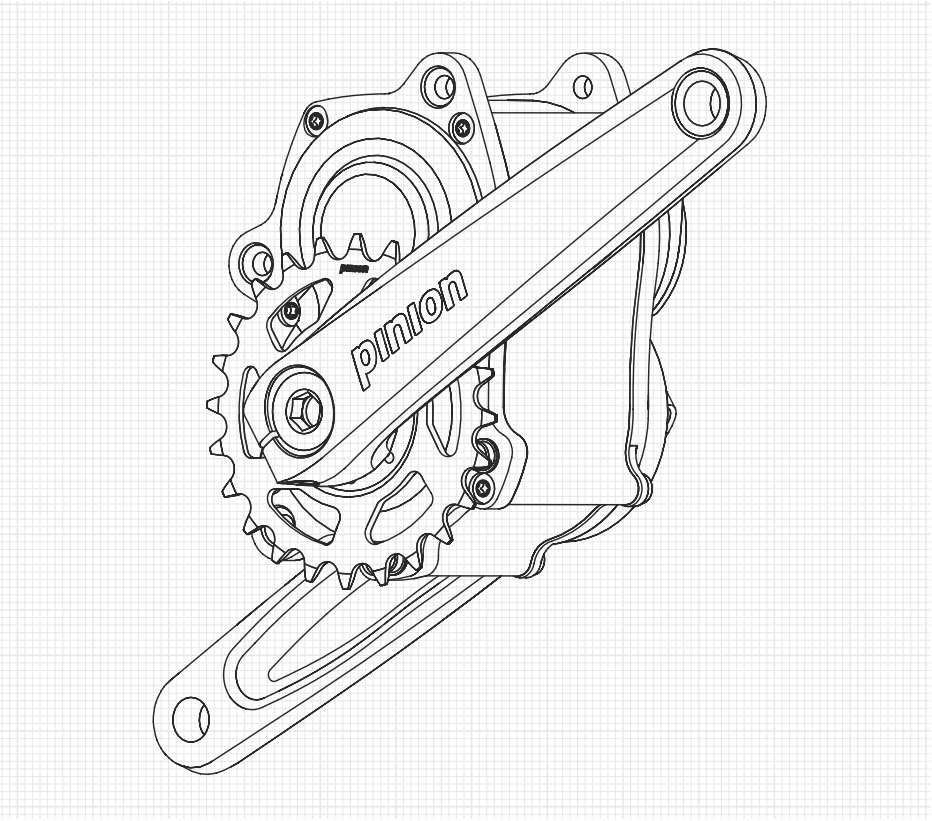

Owner's manual

© Pinion GmbH 2013
All rights reserved
Printed in Germany
06-2013
Umschlag & Inhalt:
www.technische-redaktion.de

INTRODUCTION
Foreword 4
Symbols 4

TECHNICAL DATA
Development 7
Tightening torques 7

SAFETY
Intended use 8

Basic
safety instructions 8

ON THE ROAD
Before every ride 10
Shifting correctly 11

INSTALLATION WORK
Installing rotary shifter .. 12
Installing or replacing
the derailleur cable 13
Installing Pinion chain
tensioner 22
Adjusting chain tension
(Pinion chain tensioner) 23
Replacing chain ring 24
Chain length
& chain tension 26
Installing transmission .. 26
Removing transmission . 27

MAINTENANCE WORK
Frequency 28
Adjusting shifting 29
Oil change 30
Oil change data 31

LEGAL INFORMATION
Liability 32

FOREWORD

You are now the owner of a modern Pinion bicycle transmission – made in Germany.

This owner's manual is a part of your Pinion product and contains information on how to operate, adjust, install and maintain your product safely.

Read this manual carefully before using your Pinion product. Always observe and follow all instructions in this manual – and also the user instructions from other manufacturers whose products are used on your bicycle (chain, wheels, quick release skewers etc.).

Remember that the mechanic is responsible for the suitability and compatibility of all components that interact with your Pinion product.

⚠ WARNING

If the instructions in this manual are not observed, this may result in accidents with fatal consequences or serious injury.

SYMBOLS

☞ The pointing finger prompts you to carry out an action.

➔ The arrow shows results or requirements.

ⓘ This instruction gives you additional information or tips.

⚠ WARNING

This instruction warns of a hazardous situation, which if not avoided may result in death or serious injury.

⚠ CAUTION

This instruction warns of a hazardous situation, which if not avoided may result in minor or moderate injury.

NOTICE

This instruction warns of potential material damage.

NOTICE – ENVIRONMENT

This instructions warns of potential enviroN·mental damage.

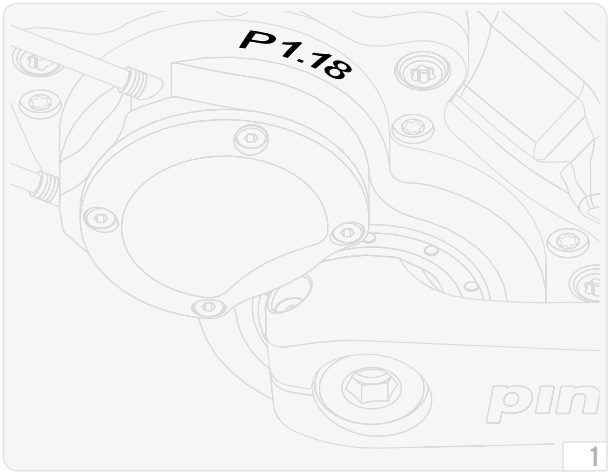

1

Keep this manual for other users of your Pinion product. Make sure that every user reads, understands and observes this manual.

If you ever sell or give away your Pinion product, give this manual to the new owner.

The illustrations in this manual may be different from your Pinion product, but the required work steps are the same for all models and variants – unless otherwise specified.

The type name of your Pinion bicycle transmission is stamped on the left side of the transmission above the transmission cover (fig. 1).

Please note that the transmission will have a different feel compared to a chain transmission.

Familiarize yourself with your new Pinion bicycle transmission and the differences in your transmission during your initial rides.

See **www.Pinion.eu** for many more tips and more information on your Pinion product.

We wish you all the best with your leisure and competitive riding.

The Pinion Team

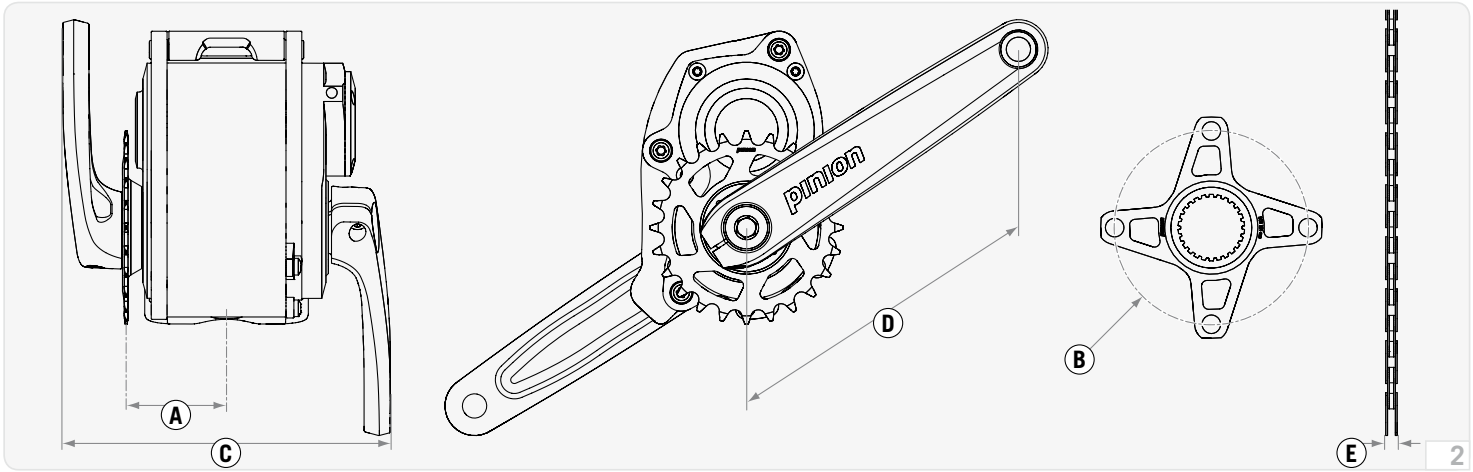

Type name		P1.18
Chainline (A) – with Pinion chain ring	mm	54*
Pitch circle ø (B), Pinion chain ring spider		104
Q-Factor (C)		174
Crank length** (D)		175 / 170
Crank hub		Pinion Standard
Dimension, chain (E)	mm	6.6–6.8 (9-speed)
Gears via rotary shifter		18
Gear ratio, total	%	636
Gear steps, constant		~ 11.5
Ratio in 1st gear (at 21:24)***		1.59
Ratio in 18th gear (at 21:24)***		0.25
Oil volume/type	ml (oz)	60 (2.0)/Pinion
Input torque max.	N·m (lbf·in)	250 (2213)
Rider weight max.****	kg (lb)	110 (243)

* If the Pinion chain ring spider is used, the chainline or beltline is defined by the contact surface (56 mm) of the spider and the dimension/geometry of the chain ring or the belt sheave that is used – e.g.: 56 mm + ½t = 58 mm chainline (with symmetrical chain ring with thickness t=4 mm).

** Optional

*** Sprocket (rear) : chain ring (front)

**** Rider + backpack etc.

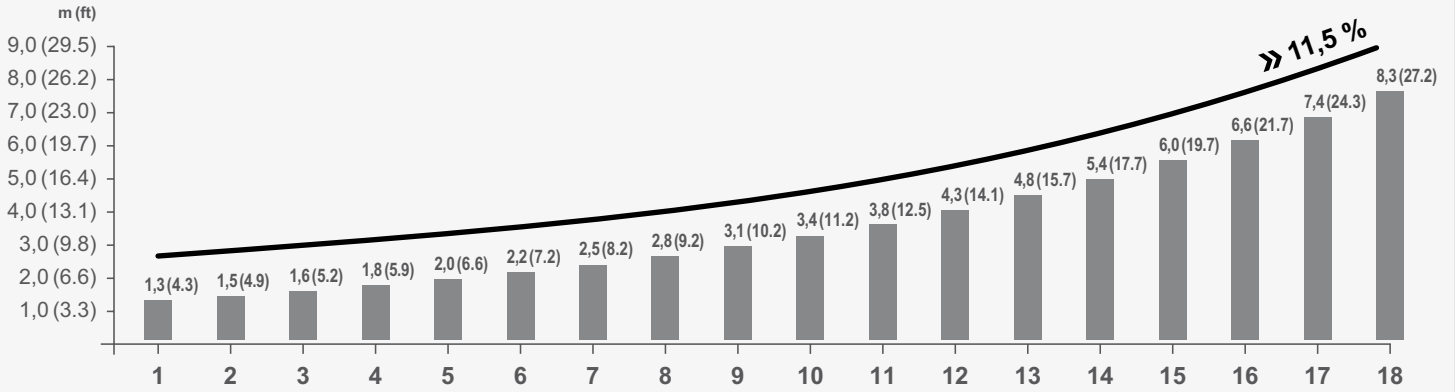

3

DEVELOPMENT

ⓘ The specified values in m (ft) per crank revolution correspond to the recommended ratio for sprocket (rear) : chain ring (front) 21 : 24 = 0.875. The calculation is based on the tyre size 26×2.2 (55-559) (fig. 3).

You can find a convenient program for calculating your individual ratio at **www.pinion.eu** >>> **SERVICE**.

TIGHTENING TORQUES

	Tightening torque in N·m (lbf·in) max.	
Transmission retaining screws	10 (89)	with threadlocker
Central crank screws	10 (89)	greased
Crank clamp screws	5 (44)	with threadlocker
Chain ring lock ring	30 (266)	greased
Shift box housing screws	1.5 (13)	dry
Rotary shifter clamp screws	1 (9)	dry
Rotary shifter cover housing screws	0.25 (2)	dry
Cable clamp screws	0.25 (2)	dry
Oil screw plug	2.5 (22)	dry

Intended use

⚠ WARNING

Use other than as intended may cause accidents resulting in death or serious injury.

Pinion bicycle transmissions are designed and intended exclusively
- for installation on bicycle frames designed for the purpose with rigid rear triangle and a transmission bracket in the area of the bottom bracket.
- for installation on bicycle frames designed for the purpose with suspension rear triangle and a transmission bracket in the area of the bottom bracket – and, if necessary, in combination with a suitable chain tensioner system that compensates for the distance between the chain ring and sprocket that varies with the movement of the suspension.
- for use with a single-gear rear freewheel rear hub without a back pedal brake*.
- for use with a rear cassette freewheel rear hub with spacers for setting the correct chainline.
- for use with a suitable chain tensioner system.
- for the maximum approved rider weight – see Technical Data, page 6.

Pinion bicycle transmissions must never be used in combination with a rigid single gear rear hub!

* A back pedal brake cannot be used with the freewheel integrated in the transmission!

Basic safety instructions ...

Always remember that cycling can be dangerous for the rider and other people and also for the bicycle and its components. Accidents resulting in death or serious injury may happen even with the best protective equipment and all required safety devices.

Use your common sense and avoid dangerous actions!

... for installation & maintenance

⚠ WARNING

A transmission damaged as a result of faulty or non-approved installation may cause an accident.
- Don't overestimate your technical ability. Have all installation and maintenance work done by a specialist workshop for bicycles. That is the only way to be sure that the work is done correctly. You can find a list of Pinion bicycle dealers at **www.pinion.eu** >>> **PARTNER**.
- Installation work that is not described in this owner's manual (e.g. opening the transmission, retightening the housing screws, etc.) must be done exclusively by a specialist workshop authorized by Pinion or by the Pinion company itself.
  Do not attempt work of this type yourself – you will not only endanger your own health but you may be exposed to liability claims.
- Never modify your Pinion product in any way (e.g. grinding, drilling, painting, etc.).
- Always use a torque wrench designed for the required torque at installation steps that require a specific tightening torque.
- Keep your bicycle in good technical condition at all times.

Unsuitable accessories and additional components may cause accidents.
- Use original Pinion parts and lubricants exclusively.
- Use a rear wheel quick release system that reaches the required

closing pressure of at least 4000 N exclusively. It is best to use a rear hub that is permanently fastened with axle nuts in the rear triangle, or which has a quick-release axle.
- Use exclusively a bicycle chain with a width of 6.6–6.8 mm (9-speed) and an appropriately sized sprocket.

... when on the road

⚠ WARNING

Component failure may cause accidents.
- Before every ride make sure that the quick release system of your wheels is correctly installed and that your wheels cannot be accidentally released.
- Before every ride make sure that your brakes are operating correctly and the brake pads are not excessively worn.
- Before every ride make sure your chain is correctly tensioned.
- Never exceed the maximum approved rider weight – see **TECHNICAL DATA**, page 6.
- Never ride with your Pinion bicycle transmission if damage (to the transmission housing, cranks, etc.) is visible, unusual noises can be heard, or you have any doubts about the transmission. Have your Pinion bicycle transmission checked by a specialist workshop for bicycles.
  You can find a list of Pinion bicycle dealers at **www.pinion.eu** >>> **PARTNER**.
- Do not ride with your Pinion bicycle transmission in temperatures below -15 °C (5 °F) or above 40 °C (104 °F).

Incorrect riding behaviour or improper equipment may cause accidents.
- Always obey the traffic regulations of the country where you are riding your bicycle (lights, reflector, etc.) and also the regulations governing off-road mountain biking.
- Always wear a good-quality, undamaged cycling helmet (e.g. ANSI-certified) and clothing that is close-fitting but does not hinder movement.
- Ride your bicycle only when you are in good physical condition and your bicycle and all its components are in good condition.

NOTICE

Damage to the transmission due to high force application.
- Avoid jumping from a great height – this exposes your Pinion bicycle transmission to very high load peaks.

Before every ride

⚠ WARNING

Component failure may cause accidents.

- Before every ride make sure that the quick release system of your wheels is correctly installed and that your wheels cannot be accidentally released.
- Before every ride make sure that your brakes are operating correctly and the brake pads are not excessively worn.
- Before every ride make sure your chain is correctly tensioned.
- Never ride with your Pinion bicycle transmission if damage (to the transmission housing, cranks, etc.) is visible, unusual noises can be heard, or if you have any doubts the condition of the transmission. Have your Pinion bicycle transmission checked by a specialist workshop for bicycles.

A chain that continues to rotate when the crank is stationary because the sprocket or rear hub does not move easily during freewheel may cause an accident.

- Before every ride make sure that the sprocket and rear hub freewheel smoothly. Rotate the crank backwards – chain must not move with the sprocket and rear hub during freewheel.

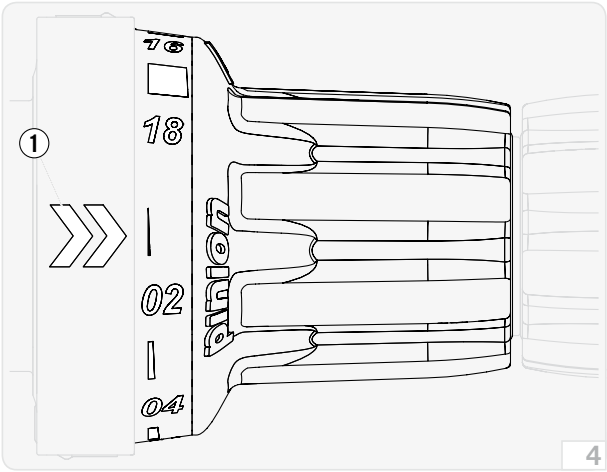

4

Shifting correctly

ⓘ The mark (1) on the fixed part of the rotary shifter shows the selected gear (fig. 4).

ⓘ You can shift through several gears with one movement (e.g. from 06 to 02). You cannot shift directly from 01 to 18 or from 18 to 01.

ⓘ You can shift at a standstill or with the crank rotating backwards and this protects the transmission.

ⓘ Downshifting (18–17–16– ... –01) under load is possible to a limited extent. To protect the transmission, the shift is not executed if the pressure on the crank or pedal is too high.

ⓘ A mechanism in the transmission allows upshifts (01–02–03– ... –18) under load. This is possible during all shifts, except when shifting from 06 to 07 and from 12 to 13. At these points the pressure on the pedal must be momentarily released.

ⓘ You may hear a more or less obtrusive clicking sound in gears 07 and 13. This is normal and there is no reason for concern.

☞ Always reduce the pressure on the pedal during downshifts (18–17–16– ... –01).

☞ When shifting up from 06 to 07 and from 12 to 13 always release the pressure on the pedal.

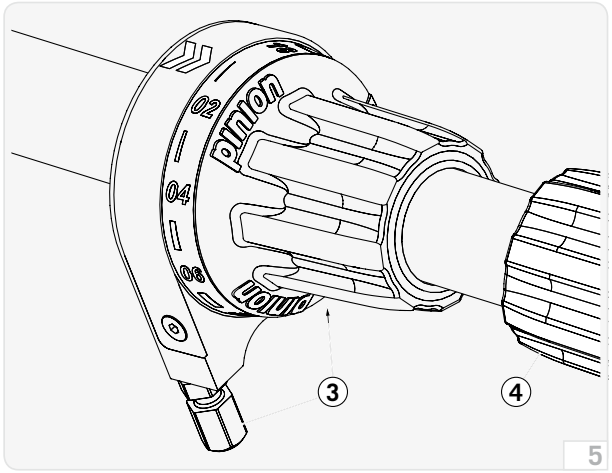

5

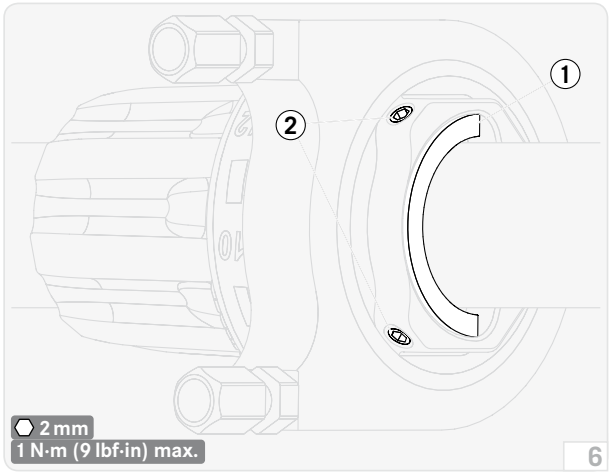

6

INSTALLING ROTARY SHIFTER

⚠ WARNING

Incorrect installation may restrict braking and steering and cause accidents.

- Make sure that the position of the rotary shifter does not interfere with the full range of operation of the brake lever.
- Make sure that the derailleur cables do not interfere with the handlebar movement.

Incorrectly mounted handlebars may fail and cause an accident.

- Make sure that the clamp ring (1) is present, the clamp screws (2) do not act directly on the handlebar surface (fig. 6).
- Always follow the manufacturer's directions for carbon handlebars.

ⓘ The Pinion rotary shifter is generally correctly positioned with the adjusting screws (3) for the derailleur cable pointing down and slightly forward – i. e. in the 4–5 o'clock direction (fig. 5).
In this position you can best see the current gear and the derailleur cables do not interfere with the brake lever.

ⓘ In the event of a fall it is advantageous if the brake lever and rotary shifter can twist. This reduces the danger of irreparable damage – including the handlebar. Tighten the clamp screws of the brake lever and rotary shifter just tight enough so they cannot be twisted by hand.

☞ Use carbon assembly paste on the clamp area for carbon handlebars.
☞ Attaching rotary shifter to the handlebar.
☞ Attach rotary shifter (4) and if applicable bar end to the handlebar (fig. 5).
☞ Push rotary shifter onto the handle of the handlebar to the stop and rotate to the correct position.
☞ Tighten the two clamp screws (2) alternately in stages – do not exceed the maximum tightening torque of 1 N·m (9 lbf·in) under any circumstances (fig. 6).

➔ The installation of the rotary shifter is complete.

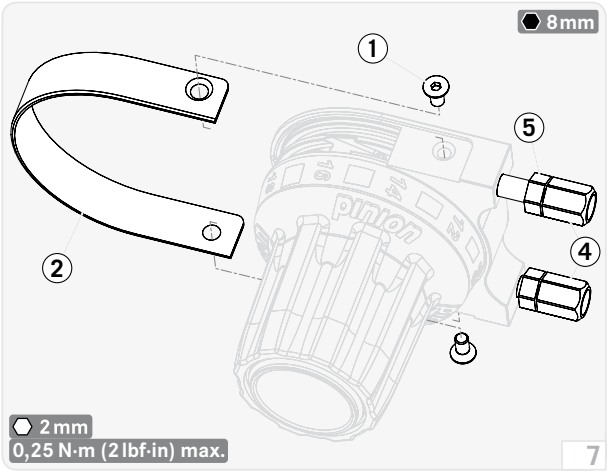

INSTALLING OR REPLACING THE DERAILLEUR CABLE

ⓘ Your Pinion bicycle transmission is operated with 1 pulling cable – even though it appears at first glance to have 2 derailleur cables. The clamps for **both** pulling cable ends are in the rotary shifter.
You can order this prepared long pulling cable directly from Pinion.
If you wish to use your own pulling cable, always use one with the following dimensions: Ø 1.2 mm / length 3000 mm. An end nipple is not necessary.

☞ Unscrew the housing screws (1) of the cover (2) on the rotary shifter.
☞ Remove the cover.

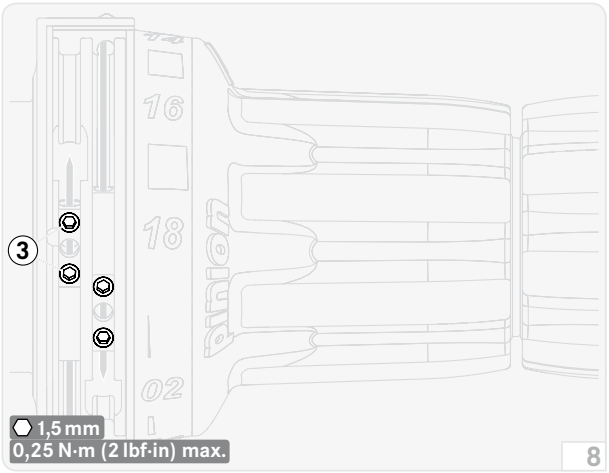

ⓘ The clamp screws are easily accessible at rotary shifter positions 01 and 18.

☞ Slacken clamp screws (3) – 2× per pulling cable end.
☞ Pull the ends of the pulling cable out of the rotary shifter.
☞ Cut off the spliced-on pulling cable ends with a sharp wire cutter.

☞ Hold adjusting screws (4) and slacken lock nuts (5) (fig. 7).
☞ Screw the lock nuts to the stop on the heads of the adjusting screws.
☞ First, screw in adjusting screws completely – then unscrew 3 revolutions.
➔ This ensures an adequate adjustment range for subsequent adjustments of the transmission.

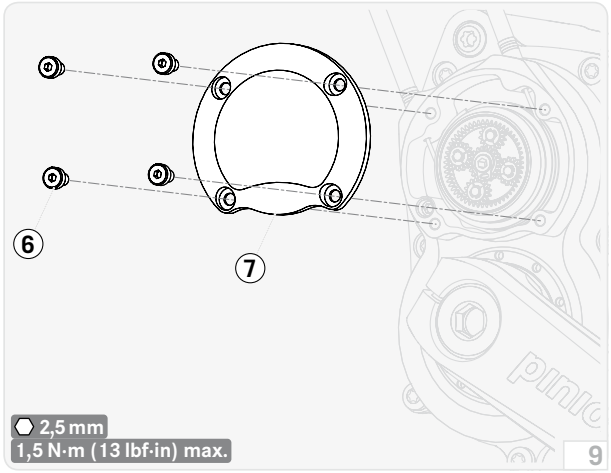

☞ Unscrew housing screws (6) of the transmission cover (7).
☞ Remove the transmission cover.

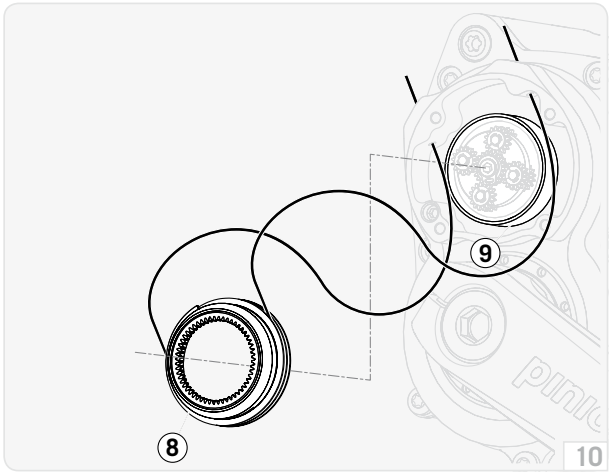

☞ Remove the pulling cable helix (8) with the cable from the transmission housing.
☞ Make sure that the PTFE slide ring (9) is correctly seated in the transmission housing.
☞ Remove the pulling cable from the pulling cable helix.
ⓘ Cut through the old pulling cable with a sharp wire cutter in the area of the insertion hole for the pulling cable helix, in order to facilitate removal.

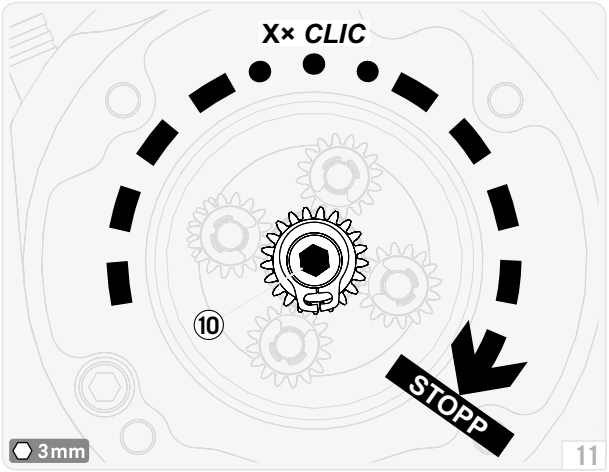

☞ Hold crank and chain ring in position.
☞ Rotate sun gear (10) clockwise to the stop with a 3 mm Allen wrench.
➔ 1st gear is engaged.

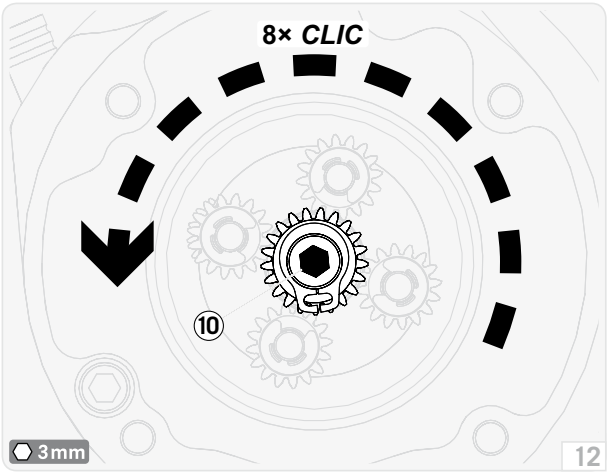

☞ Hold crank and chain ring in position.
☞ Rotate sun gear (10) 8 clicks counterclockwise with 3 mm Allen wrench.
➔ 9th gear is engaged.

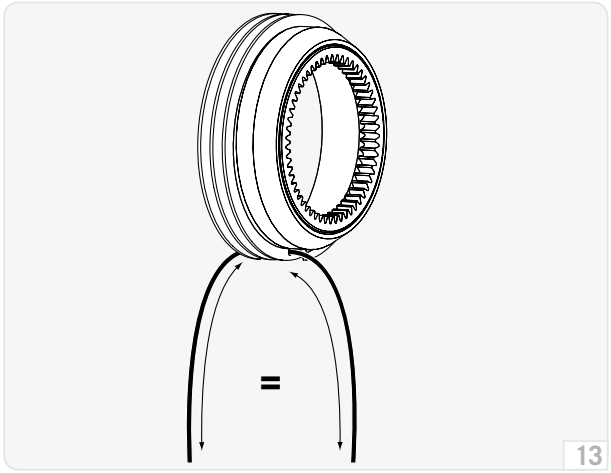

- Insert new pulling cable through the hole in the pulling cable helix.
- Leave the pulling cable ends hanging with equal lengths (fig. 13).

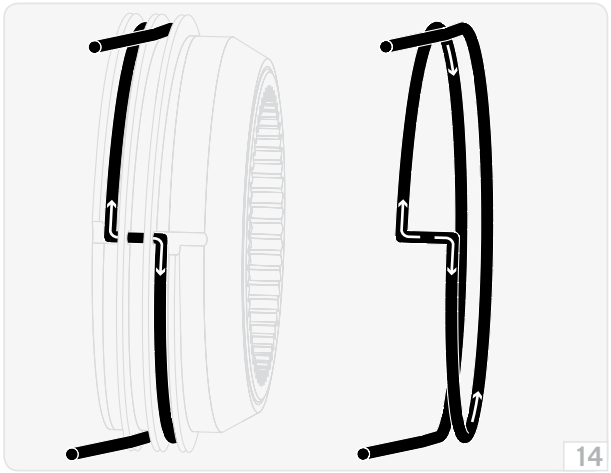

- Wind the pulling cable ends ¾ revolution around the pulling cable helix (fig. 14).
- Press the pulling cable at the bends into the guide of the pulling cable helix with a small screwdriver or similar.
- Hold the pulling cable with the pulling cable helix with one hand so the pulling cable cannot unwind.

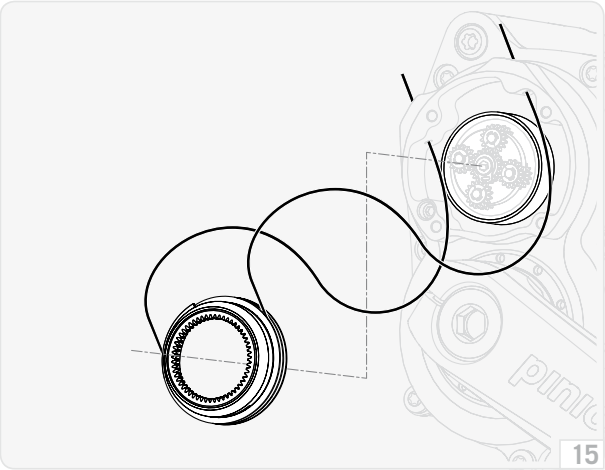

- Insert the ends of the pulling cable through the holes in the transmission housing (fig. 15).
- Maintain tension on the ends of the pulling cable.

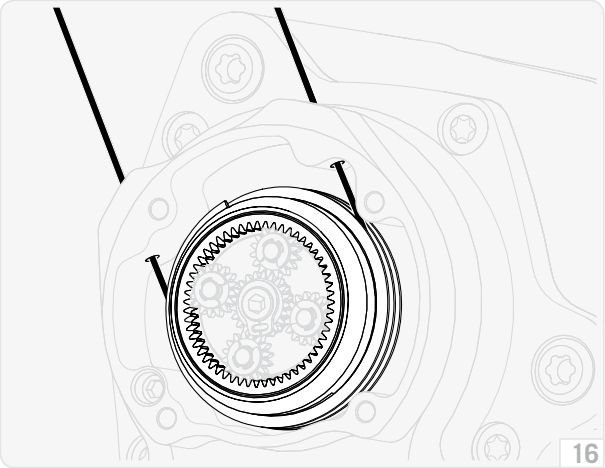

- Make sure that the PTFE slide ring (9) is correctly seated in the transmission housing (fig. 10).
- Insert pulling cable helix into the transmission housing (fig. 16).
- Make sure that the insertion hole of the pulling cable helix is centrally positioned between the transmission housing holes.
- Maintain tension on the ends of the pulling cable.

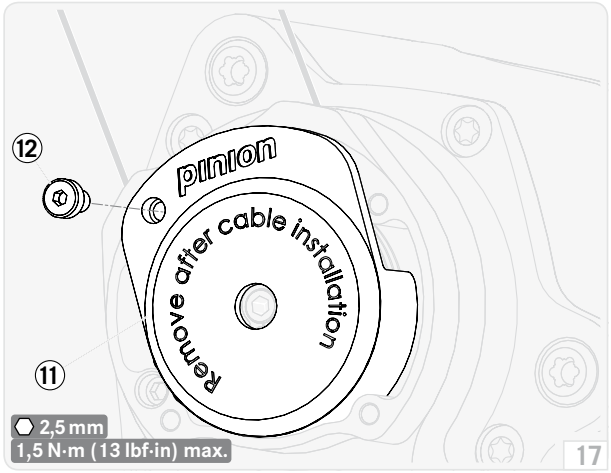

☞ Put on the mounting clip (11) and secure with 1 housing screw (12) of the transmission cover (fig. 17).

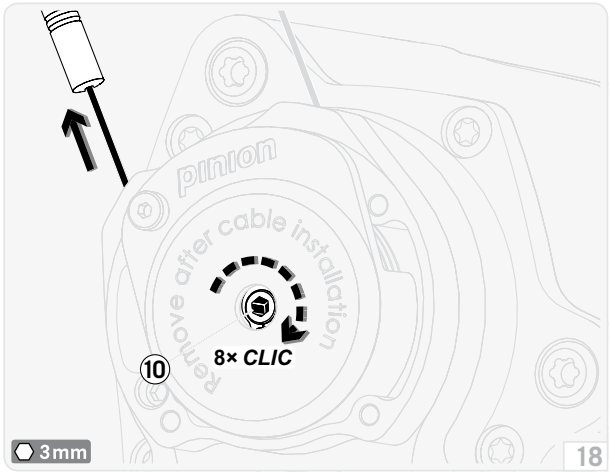

☞ Rotate the sun gear (10) 8 clicks clockwise or to the stop with a 3 mm Allen wrench (fig. 18).
➔ 1st gear is engaged.
☞ Insert the left end of the pulling cable through the derailleur cable outer sleeve.

NOTICE

The pulling cable has a tendency to come unspliced on outer sleeve end caps made from metal.

– Use outer sleeve end caps made from plastic (Ø 5.8 mm).

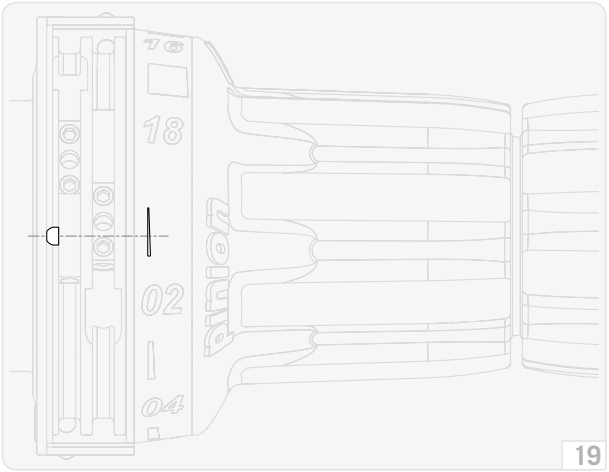

☞ Switch rotary shifter to position 01 (fig. 19).

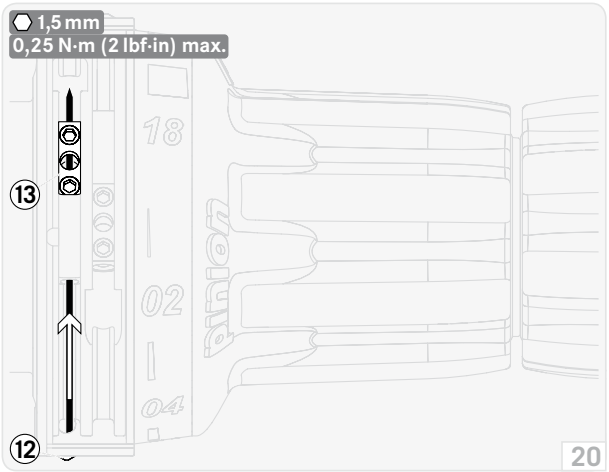

☞ Insert the left end of the pulling cable into the internal – towards the centre of the handlebar – adjusting screw (12), rotary shifter housing and clamp (13).
☞ Keep the left end of the pulling cable under tension (fig. 20).
☞ Make sure that the ends of the derailleur cable outer sleeves are firmly in the stops on the adjusting screw and transmission housing.
☞ Tighten the two clamp screws alternately to a tightening torque of 0.25 N·m (2 lbf·in).
☞ Cut the left end of the pulling cable as close as possible to the clamp with a sharp wire cutter.
ⓘ Pry the clamp out of its seat somewhat. Then, it will be easier to cut off the end of the pulling cable.

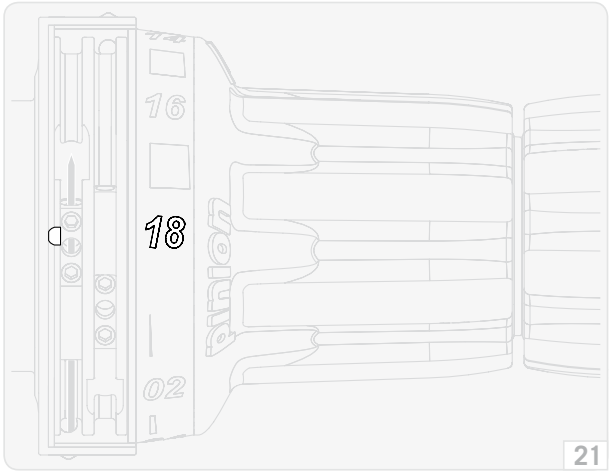

☞ Rotate rotary shifter clockwise (01–02–03– … –18) to position 18 (fig. 21).

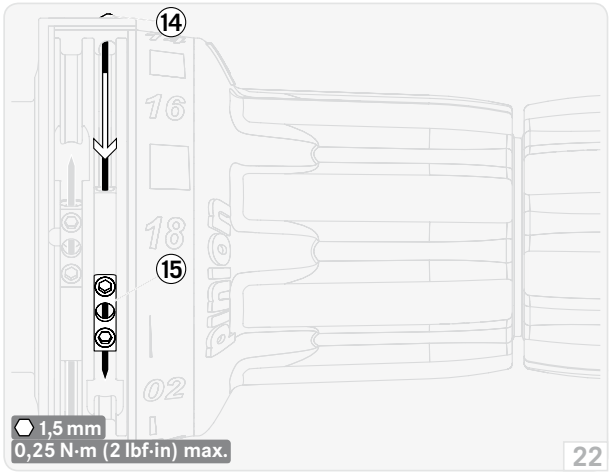

☞ Insert the right end of the pulling cable through the derailleur cable outer sleeve.
☞ Insert the right end of the pulling cable into the outer – towards the end of the handlebar – adjusting screw (14), rotary shifter housing and clamp (15).
☞ Keep the right end of the pulling cable under tension (fig. 22).
☞ Make sure that the ends of the derailleur cable outer sleeves are firmly in the stops on the adjusting screw and transmission housing.
☞ Tighten the two clamp screws alternately to a tightening torque of 0.25 N·m (2 lbf·in).
☞ Cut off the right end of the pulling cable as close as possible to the clamp with a sharp wire cutter.

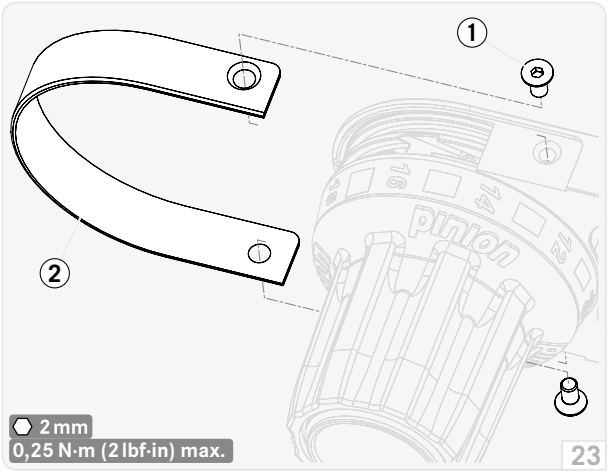

- ☞ Position cover (2).
- ☞ Tighten housing screws (1) to a tightening torque of 0.25 N·m (2 lbf·in).

- ☞ Test shifting function, if necessary adjust cable tension with the adjusting screws – see ADJUSTING SHIFTING, page 29.

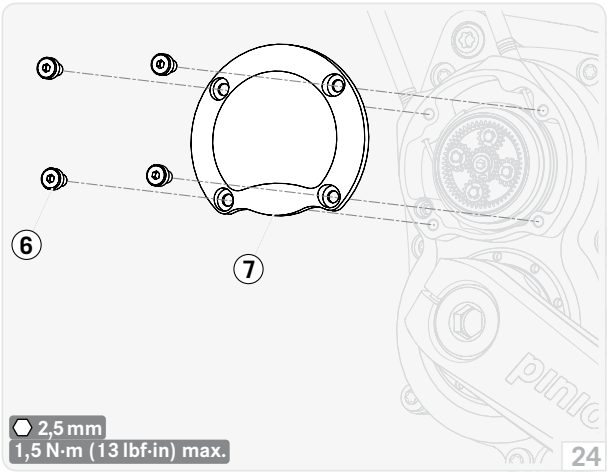

- ☞ Remove the mounting clip (fig. 17).
- ☞ Position transmission cover (7) (fig. 24).
- ☞ Tighten housing screws (6) to a tightening torque of 1.5 N·m (13 lbf·in).

➔ The replacement of the derailleur cable is complete.

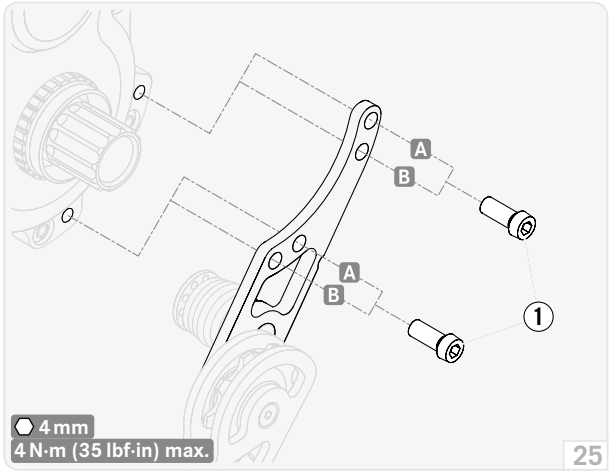

25

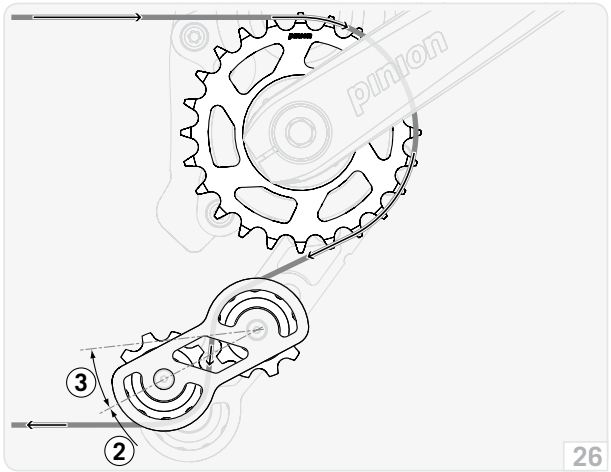

26

INSTALLING PINION CHAIN TENSIONER

⚠ WARNING

If a chain tensioner fails because of improper use, it may cause an accident.

The Pinion chain tensioner is designed and intended exclusively for use with a Pinion bicycle transmission.

– Always install the Pinion chain tensioner on the retaining positions on your Pinion bicycle transmission only.

ⓘ The Pinion chain tensioner can be mounted on your Pinion bicycle transmission in one of 2 different positions: **A** or **B** (fig. 25).
The selection of the correct position depends on the installation position selected by the manufacturer of your bicycle for the Pinion bicycle transmission.
Make sure that your Pinion chain tensioner transfers the tension effect in full to your bicycle chain in the position that you select, but also cannot contact the chain stay or tyre of your bicycle at any position.

☞ Remove chain.
☞ Remove crank and chain ring – see REPLACING CHAIN RING, page 24.
☞ Tighten retaining screws (1) to a tightening torque of 4 N·m (35 lbf·in).
☞ Install crank and chain ring – see REPLACING CHAIN RING, page 24.
☞ Position chain and guide it through the tension mechanism (fig. 26).
☞ Connect chain.
ⓘ Your chain has the correct length if the tension mechanism of the chain tensioner is pretensioned (2), but can still be moved upwards (3) further (fig. 26).

➔ The installation of the Pinion chain tensioner is complete.

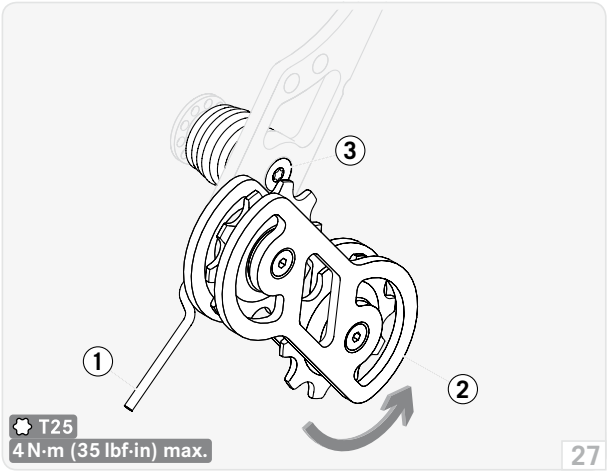

ADJUSTING CHAIN TENSION (PINION CHAIN TENSIONER)

ⓘ If your chain frequently hits the chain stay on your bicycle frame while you are riding, it may be necessary to increase the chain tension.
If the chain or cranks continue to rotate although the rear wheel freewheel is operating correctly, or if the chain tensioner rattles, it may be necessary to reduce the chain tension.

- ☞ Remove the chain and take it off the chain ring and sprocket.
- ☞ Disconnect the spring leg (1) at the tension mechanism (2).
- ☞ Rotate the tension mechanism forward.
- ☞ The screw (3) of the spring shaft is accessible.

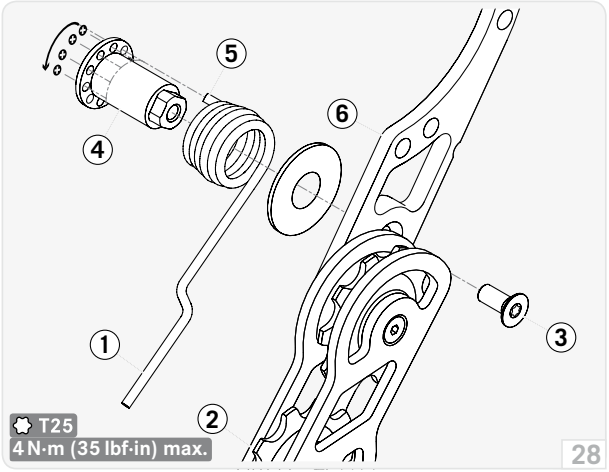

- ☞ Unscrew the screw (3) of the spring shaft (4).
- ☞ Move the spring end pin (5) counterclockwise (+).
- ➔ The chain tension is increased.
- ☞ Make sure that the square head of the spring shaft is in the same position in its opening in the base plate (6) as before.
- ☞ Screw in the screw (3) of the spring shaft (4) and tighten to a tightening torque of 4 N·m (35 lbf·in).
- ☞ Position the chain on the chain ring and sprocket.
- ☞ Attach spring leg (1) to tension mechanism.
- ☞ Check the setting and repeat the procedure if necessary.

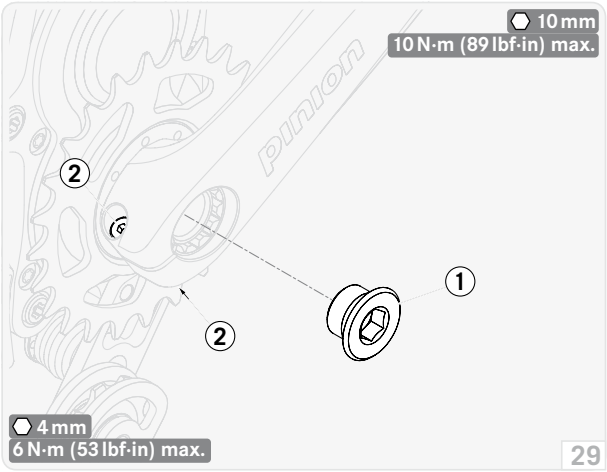

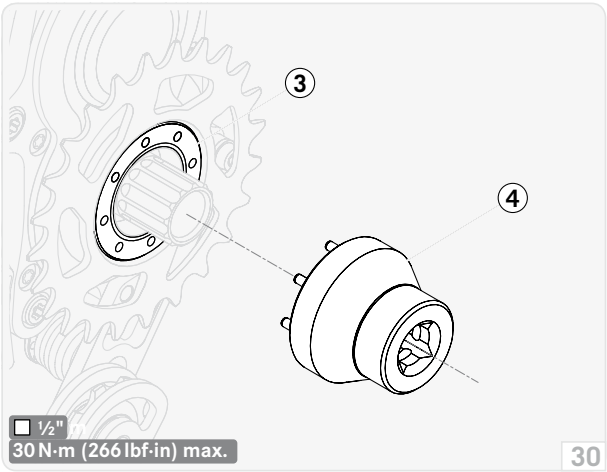

REPLACING CHAIN RING

ⓘ If you need to replace the chain ring of your Pinion bicycle transmission (because of wear, different gear ratio, replacement by chain ring spider), you can order it and the required tool directly from us.
See **www.pinion.eu** for a selection of different chain rings.

ⓘ Another method of changing the gear ratio is to replace the sprocket on your rear wheel.

ⓘ Chain ring, sprocket and chain always wear on opposite sides during use. This means that the drive might stop working without problems (chain disengages, more noise) if only one of these parts is replaced.
We recommend always replacing all these parts if one needs replacing.

☞ Remove chain.
☞ Unscrew centre screw (1).
☞ Slacken both clamp screws (2) on the crank.
☞ Pull the crank from the input shaft.

☞ Hold chain ring with chain whip.
☞ Unscrew lock ring (3) clockwise (left-hand thread!) with the Pinion lock ring tool (4).
☞ Remove chain ring.

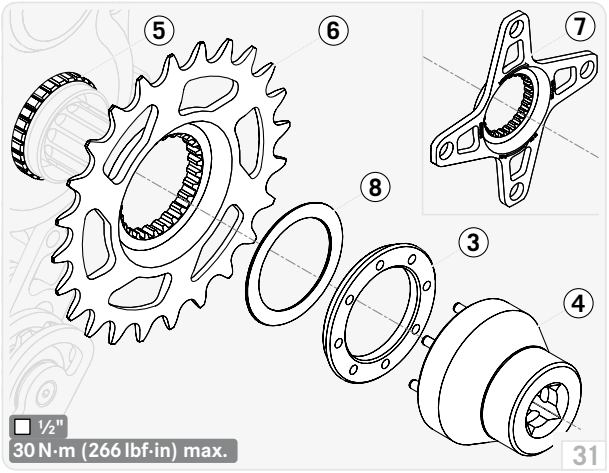

- ☞ Make sure that the gears (5) and contact surfaces on the transmission side and the chain ring (6) or chain ring spider (7), disc (8) and lock ring (3) are clean and free from old grease.
- ☞ Lightly grease gears (5).
- ☞ Put on the chain ring or chain ring spider (with chain ring fitted).
- ☞ Lightly grease the contact areas of the disc (8).
- ☞ Insert the disc in the chain ring or chain ring spider.
- ☞ Lightly grease the contact area and thread of lock ring (3).
- ☞ Screw in lock ring counterclockwise (left-hand thread!) with the Pinion lock ring tool (4).
- ☞ Hold chain ring with chain whip.
- ☞ Tighten lock ring (3) to a tightening torque of 30 N·m (266 lbf·in).
- ☞ Fit a new chain if necessary – see **CHAIN LENGTH & CHAIN TENSION**, page 26.

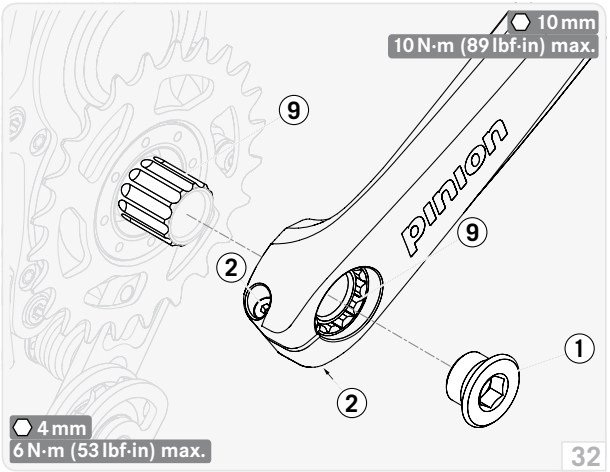

ⓘ To protect the gears (9) on the input shaft and cranks from one-sided loads, it is a good idea to remove both cranks regularly (1× a year) and to reinstall them offset by 1–2 teeth and with fresh grease.

- ☞ Make sure that the gears (9) on the input shaft and crank are clean and free from old grease.
- ☞ Lightly grease gears.
- ☞ Position crank and push it manually on the input shaft to the stop – do not use any impact tools (hammer etc.).
- ☞ Screw in centre screw (1) and tighten to a tightening torque of 10 N·m (89 lbf·in).

ⓘ The crank can now be moved by another 1–2 mm on the input shaft – this is normal and no reason for concern!

- ☞ Pull the crank outward as far as the stop.
- ☞ Tighten the clamp screws (2) in stages and alternately until both clamp screws have reached a tightening torque of 6 N·m (53 lbf·in).

➔ The replacing of the chain ring is complete.

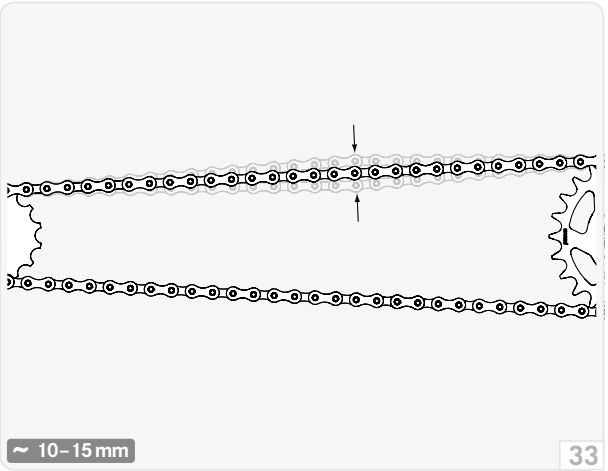

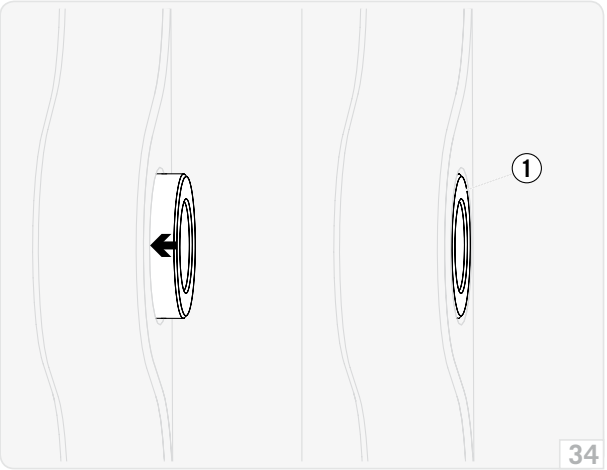

CHAIN LENGTH & CHAIN TENSION

ⓘ The correct length of your bicycle chain depends on various factors:

- The number of teeth on the sprocket and chain ring – after replacement it may be necessary to determine the chain length again.
- Suspension travel and type of spring rear hub of your bicycle frame – follow the manufacturer's instructions.
- Type of chain tensioner or tensioning system (horizontal dropout ends with clamp screws) – follow the manufacturer's instructions.

ⓘ The basic rule for the length of your bicycle chain is as short as possible and as long as necessary. The function and adjustment range of your chain tensioner and the complete suspension of the rear triangle must not be impaired.

NOTICE

Accelerated wear of the complete drive because of excessively high chain tension.

– For direct tension (horizontal dropouts with clamp screws) make sure that the chain has approx. 10–15 mm play (fig. 33).

Accelerated wear of the complete drive because of crooked chain running.

– Make sure that the gaps between your rear hub and the chainline of your Pinion bicycle transmission match – see TECHNICAL DATA, page 6.

INSTALLING TRANSMISSION

NOTICE

Incorrect installation may distort and damage the transmission.

– Make sure that all 4 key sleeves (1) (fig. 34/35) are installed flat in their seats in the transmission housing – if necessary, press in with a parallel pressing tool (e.g. screw clamp, suitable clamp, etc.) (fig. 34).

– Follow the sequence and tightening torque (fig. 35).

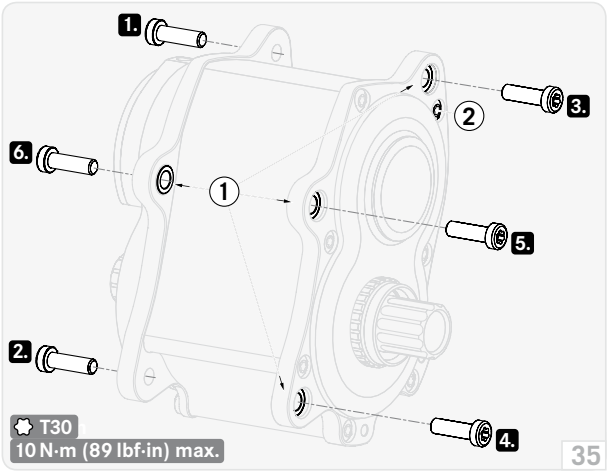

- Make sure that all contact points between the transmission and bicycle frame bridge are clean.
- Apply fresh screw locking fluid (medium) to the transmission retaining screws.
- Position transmission in the bicycle frame bridge.
- Position all screws.
- Tighten screws in the specified sequence (fig. 35) to a tightening torque of 10 N·m (89 lbf·in).

➔ The installation of the transmission is complete.

NOTICE

Housing screws (2) are stress bolts. They are not allowed to be retightened under any circumstances and – once unscrewed – must be replaced by new ones! (fig. 35)

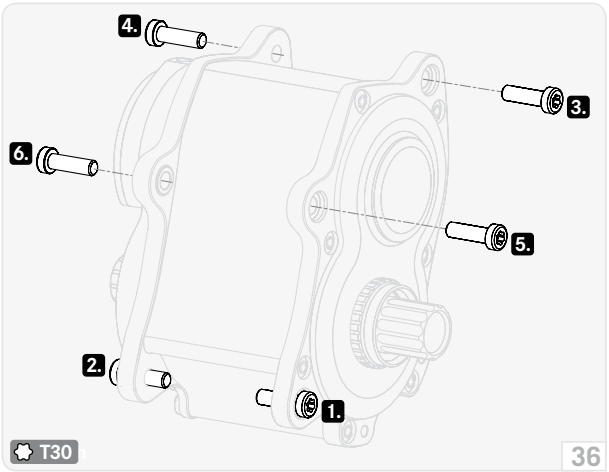

REMOVING TRANSMISSION

- Unscrew the pulling cable at the rotary shifter – see INSTALLING OR REPLACING THE DERAILLEUR CABLE, page 13.

⚠ CAUTION

Danger of injury if the transmission drops down – approx. 2.7 kg (6 lb) weight.

- Get a helper to secure the transmission during removal.

- Initially only loosen the 2 bottom screws (fig. 36).
- Unscrew the 4 upper screws.
- If necessary, remove the transmission from the bicycle frame bridge with assembly irons, and tilt it downwards.
- Get a helper to secure the transmission.
- Unscrew the 2 lower screws.
- Remove transmission in the bicycle frame bridge.

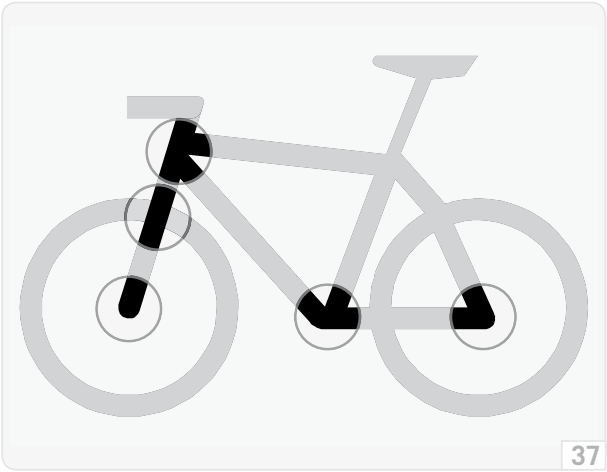
37

Frequency

ⓘ The frequency of use and weather conditions determine the frequency of maintenance work on your Pinion bicycle transmission.
Carry out the following maintenance operations more frequently if you use your bicycle under extreme conditions (rain, dirt, long distances, etc.).

NOTICE

Corrosion and material damage by penetration of water.

- Never use a pressure cleaner or steam cleaner to clean your bicycle – the seals in the bicycle components cannot withstand this pressure.
- Be careful even if you use an ordinary hose. Never direct a spray of water directly at the areas of a seal (fig. 37).

☞ Clean the transmission housing with water, detergent and a brush.

☞ Clean the chain, chain ring, sprocket and, if necessary, the rollers of the chain tensioner.

☞ Oil the chain lightly.

NOTICE

Housing screws (2) are stress bolts. They are not allowed to be retightened under any circumstances and – once unscrewed – must be replaced by new ones! (fig. 35)

☞ Check that all screw fasteners – except housing screws – have the required tightening torque and adjust if necessary.

☞ Check the tension and smoothness of the derailleur cable – see **Adjusting shifting**, page 29.

☞ Check the chain tension – see **Chain length & chain tension**, page 26.

☞ Correct the chain tension if necessary – see **Adjusting chain tension (Pinion chain tensioner)**, page 23.

☞ Check that the chain tensioner rollers move smoothly and inspect for wear (excessive play, loud running noises) – replace rollers if necessary (fig. 38).

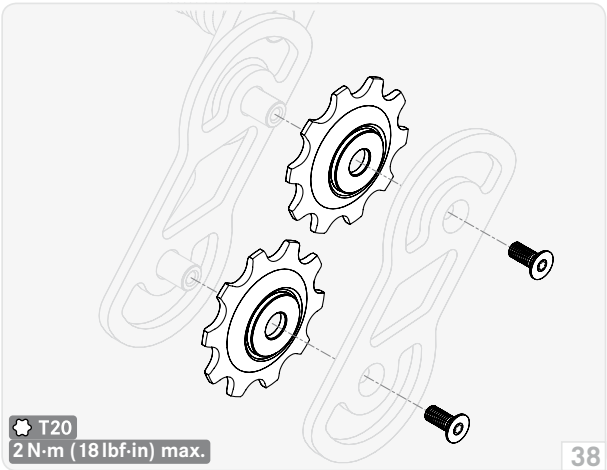

38

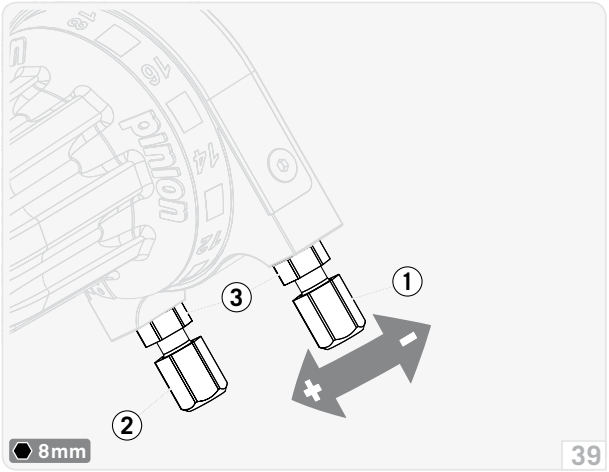

39

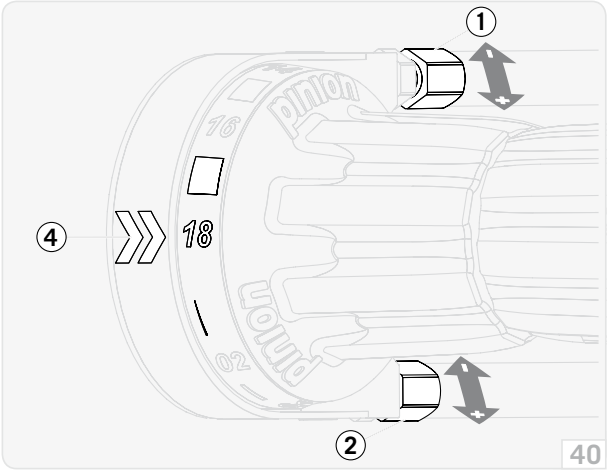

40

ADJUSTING SHIFTING

ⓘ Your Pinion bicycle transmission is correctly adjusted if
it shifts immediately (cable tension),
all 18 gears can be selected with minimum force (cable tension),
the display on the rotary shifter matches the selected gear (synchronization).

☞ Hold adjusting screws (1) (2) and slacken lock nuts (3) (fig. 39).

Adjusting cable tension

ⓘ The cable tension is in the correct range if the ends of the derailleur cable outer sleeves are within the stops on the transmission and rotary shifter without play and are not under tension.

☞ Unscrew both adjusting screws ¼ revolution counterclockwise (+).
➔ Cable tension is increased.
➔ Force required is increased.

or:

☞ Screw in both adjusting screws ¼ revolution clockwise (-).
➔ Cable tension is reduced.
➔ Shift is less immediate.

Synchronizing position of rotary shifter

☞ Shift rotary shifter clockwise (01–02–03– … –18) to the stop towards position 18 (fig. 40).
☞ Check that the symbol for position 18 is centrally placed beside the mark (4).
☞ Screw in adjusting screw (1) ¼ revolution clockwise (-).
Unscrew adjusting screw (2) ¼ revolution counterclockwise (+).
➔ The rotary shifter scale moves counterclockwise (towards position 17).

or:

☞ Unscrew adjusting screw (1) ¼ revolution counterclockwise (+).
Screw in adjusting screw (2) ¼ revolution clockwise (-).
➔ The rotary shifter scale moves counterclockwise (towards position 01).

☞ Check setting and repeat procedure if necessary
☞ Hold adjusting screws (1) (2) and tighten lock nuts (3) to a tightening torque of 2–3 N·m (18–27 lbf·in) (fig. 39).

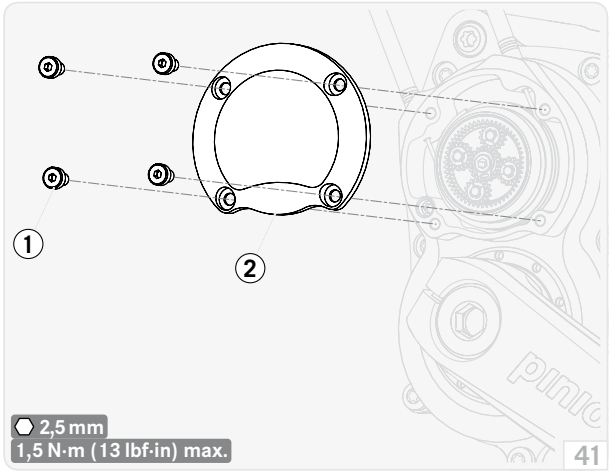

OIL CHANGE

ⓘ Every 10000 km (6200 miles) or 1× per year the oil in your Pinion bicycle transmission must be changed.
Use original Pinion transmission oil exclusively.
Oil volume – see TECHNICAL DATA, page 6.

NOTICE – ENVIRONMENT

Dispose of used lubricants and oils correctly and in accordance with the applicable regulations – never dispose of waste in the sewage system or in the ground.

- ☞ Unscrew housing screws (1) of the transmission cover (2).
- ☞ Remove the transmission cover.

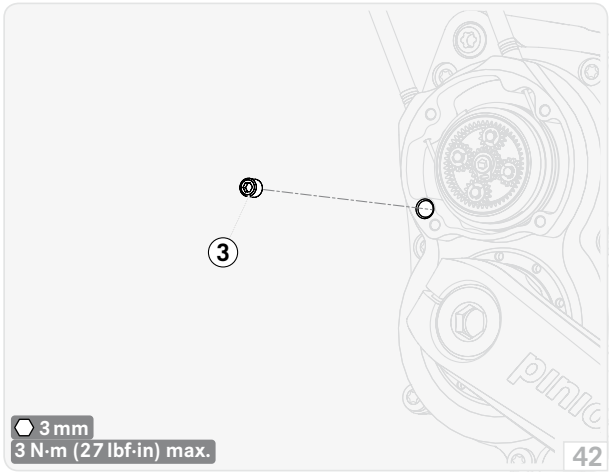

- ☞ Unscrew the screw plug (3) from the filler opening.
- ☞ Have a drainage tray ready.
- ☞ Place bicycle on its side.
- ☞ Drain used oil completely from the filler opening into the drainage tray.
- ☞ Place the bicycle upright or replace on repair stand.
- ☞ Add fresh oil, fill volume – see TECHNICAL DATA, page 6.
- ☞ Replace screw plug (3) in filler opening and tighten to a tightening torque of 2.5 N·m (22 lbf·in).
- ☞ Position transmission cover (2).
- ☞ Tighten housing screws (1) to a tightening torque of 1.5 N·m (13 lbf·in).

➔ The oil change is complete.

OIL CHANGE DATA

ⓘ The adjacent table is used for documenting oil changes on your Pinion bicycle transmission.
It is not essential to have oil changes performed by a specialist workshop, but they must be done proficiently so as to avoid the possibility of claims on the grounds of liability for material defects.

Transmission serial no.:		Purchase date:	
Oil change	**Date / dealer stamp**	**Oil change**	**Date / dealer stamp**
1		7	
2		8	
3		9	
4		10	
5		11	
6		12	

Liability

The legal liability requirements apply for damage to material and workmanship. The liability period starts on the date of initial purchase.

This does not include components that are subject to normal wear (e. g. shift cable with external sleeve).

Damage caused by improper use, unintended use or improper installation or maintenance (e.g. opening the transmission, modifications, etc.) is not included.

We also do not accept liability for immediate or consequential damages arising from negligence.

ⓘ In case of damage, first contact the dealer from which you purchased your Pinion product.
The dealer will contact the bicycle manufacturer, distributor or us directly to discuss the procedure on your behalf.
Do not return a defective Pinion product directly to us without prior consultation.

Pinion GmbH
Heerweg 15 A
73770 Denkendorf

phone **+49 711 217491-50**
fax **+49 711 217491-79**
info@pinion.eu
www.pinion.eu